Line Card for Services, Equipment & Methods

KP Ventures Drilling & Pump
KP Exploration Surface Drillers

Water Well Drilling & Pumps

DRILLING SERVICES

Water Production Wells
Municipal/ Commercial Wells
Aquifer Storage & Recovery
Residential Wells
Monitoring Wells
Piezometers

PUMPS

Vertical Turbine Installation, Repair, and Service
Submersible Pump Install, Repair and Service
New pump Design & Install
Well Rehabilitation & Service
Pump & Electrical Component Troubleshooting

MACHINE SHOP

Fully Staffed Machine Shop
Turbine Repair, Surfacing, Threading, and Machining

Equipment

DRILLING

Gardner Denver 2500
Taylor RT 4000
Gefco Speedstar 150K
Gefco Speedstar SS40
Atlas Copco T3W
Schramm T660
Versadrill Mark 70
VersadrillV2000
Bucyrus Erie 36 Cable Tool
Bucyrus Erie 22 Cable Tool
Bucyrus Erie 16 Cable Tool

PUMP HOISTS

(3) Pulstar P100,000
(2) General Motors Pump Rig
Semco 25000
Smeal

Drilling Methods

Flooded Reverse Rotary
Direct Air & Mud Rotary
Down-Hole Hammer
Direct Mud Rotary
Casing Advance

Exploration

DRILLING SERVICES

R/C Drilling & Sampling
Diamond Core Drilling
Mine Service Holes
Monitoring/ Compliance Wells

Equipment

DRILLING

VersaDrill KMN1.4s
Diamond Core (Rubber Tracks)
VersaDrill KMN1.4s
Diamond Core (Steel Tracks)

Drilling Methods

Diamond Core
Dual Tube Reverse Circulation

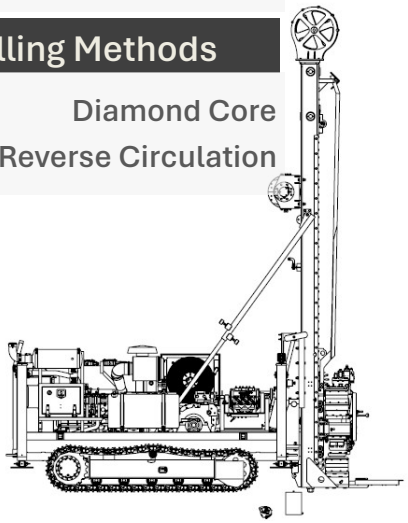

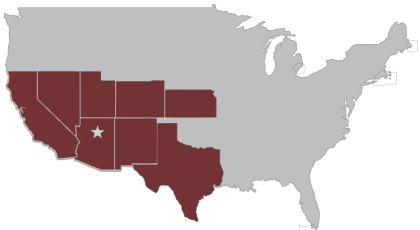

3 Locations in Arizona
Camp Verde, Glendale, Salome
Serving 8 States of the SW

For more information about our service offerings or to request a quote, please contact Clayton Thayer. 505.240.0833. Claytont@kpvent.com or Tyler Johnson. 928.301.1128. tylerj@kpvent.com Offices—Camp Verde 928.639.1709 or Glendale 623.230.4060